GERMICIDAL UV LIGHT
UVC AIR DISINFECTION MODULE

Installation & Operation Manual

Model:AT30

This germicidal UV light is installed inside the cassette and internal surfaces of HVAC systems to reduce biological contamination for reducing maintenance and improving indoor air quality.

BEFORE INSTALLING

- Read all instructions carefully. Failure to do so could damage the equipment or cause harm to yourself or others.
- Acknowledge all warnings.
- Only qualified technicians should perform the installation.

INCLUDED INSIDE BOX

- UV module
- Octagonal lamp brackets
- 3M tapes & Cable ties
- Installation & operation manual
- UV warning label

SPECIFICATIONS

Dimensions	Lamp Length	250mm x 18mm Diameter
	Power Module	164 x 46 x 16.8mm
	Bracket	25 x 8.8mm Diameter
Wavelength		253.7nm
Electrical		90 - 264 Vac
Rated power		30W
Weight		450g
Humidity		Water resistant lamp
Lamp Life		12,000 hours
Warranty		1 year

UV INSTALLATION NOTES

⚠ DANGER

Ultraviolet Radiation

Protect eyes and skin from direct and reflected radiation.

HAZARDOUS VOLTAGE

Turn off and disconnect power before servicing.

Hg- LAMP CONTAINS MERCURY.

Do not put in trash. Dispose in accord with local, state or federal law.

This module is typically used in cassette unit and other limited space applications. Because space is tight, the best place for mounting the UV lights is usually inside the supply vent with the light shining onto the blower wheel (which is prone to the worst mold growth.)

Cutaway view of typical AT30 installation in cassette.(Figure 1.)

Figure 1.

OPEN THE CASSETTE COVER

1

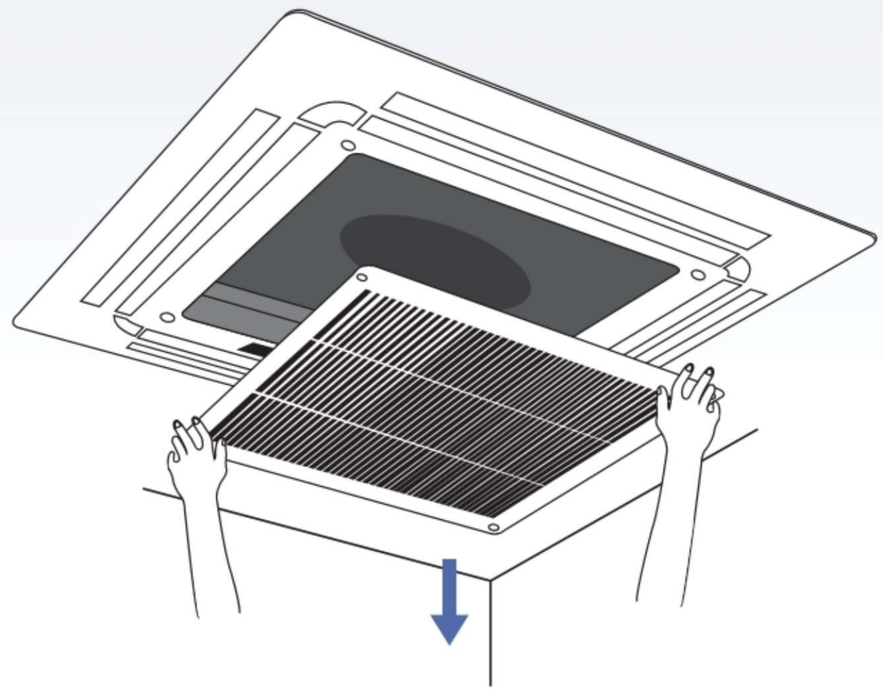

UV LAMP MOUNTING

2

- Need to wear protective gloves.
- Determine the best location for the UV lamp brackets and clean the area. Slide the mounting brackets onto the ends of UV lamps. (Figure 2.)

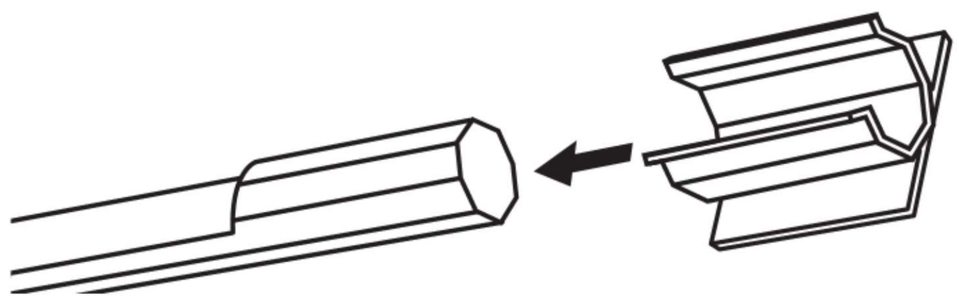

Figure 2.

3

Peel off paper from the adhesive backing on the mounting brackets. Press the lamp with the lamp brackets firmly in place about 2" from blower wheel. (Figure 3.)

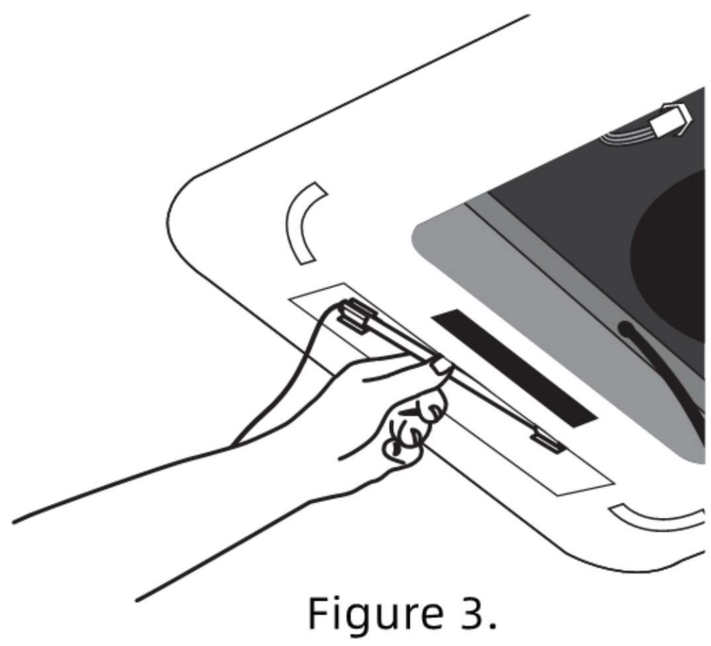

Figure 3.

NOTE

Clock the lamp in the octagonal lamp brackets so that the UV lights shine on the blower wheel and mold prone areas, NOT INTO THE ROOM.

AIRFLOW SENSOR MOUNTING

4 Stick the airflow sensor on the air supply outlet with 3 M tape. (Figure 4.)

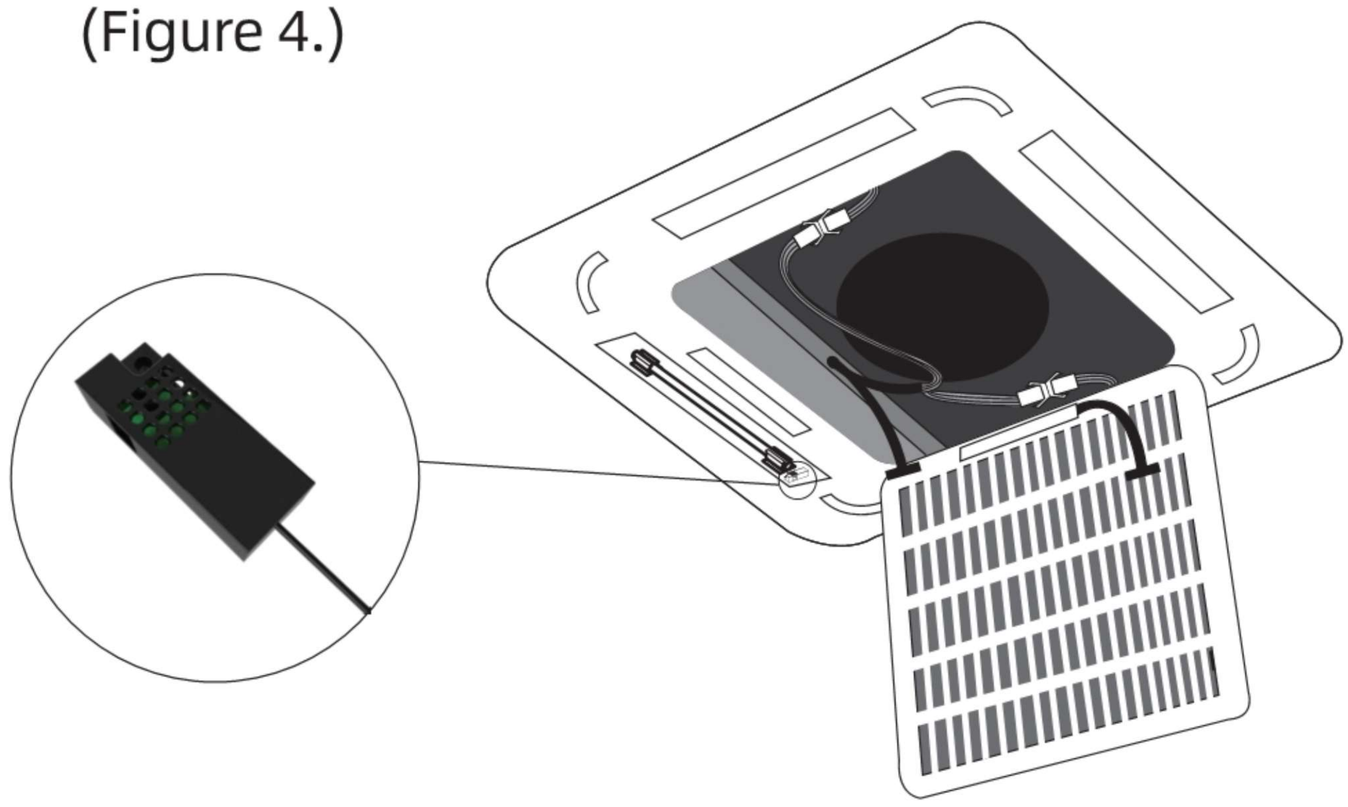

Figure 4.

POWER SUPPLY

5 Fix the power supply with 2 pcs 3M tapes. (Figure 5)

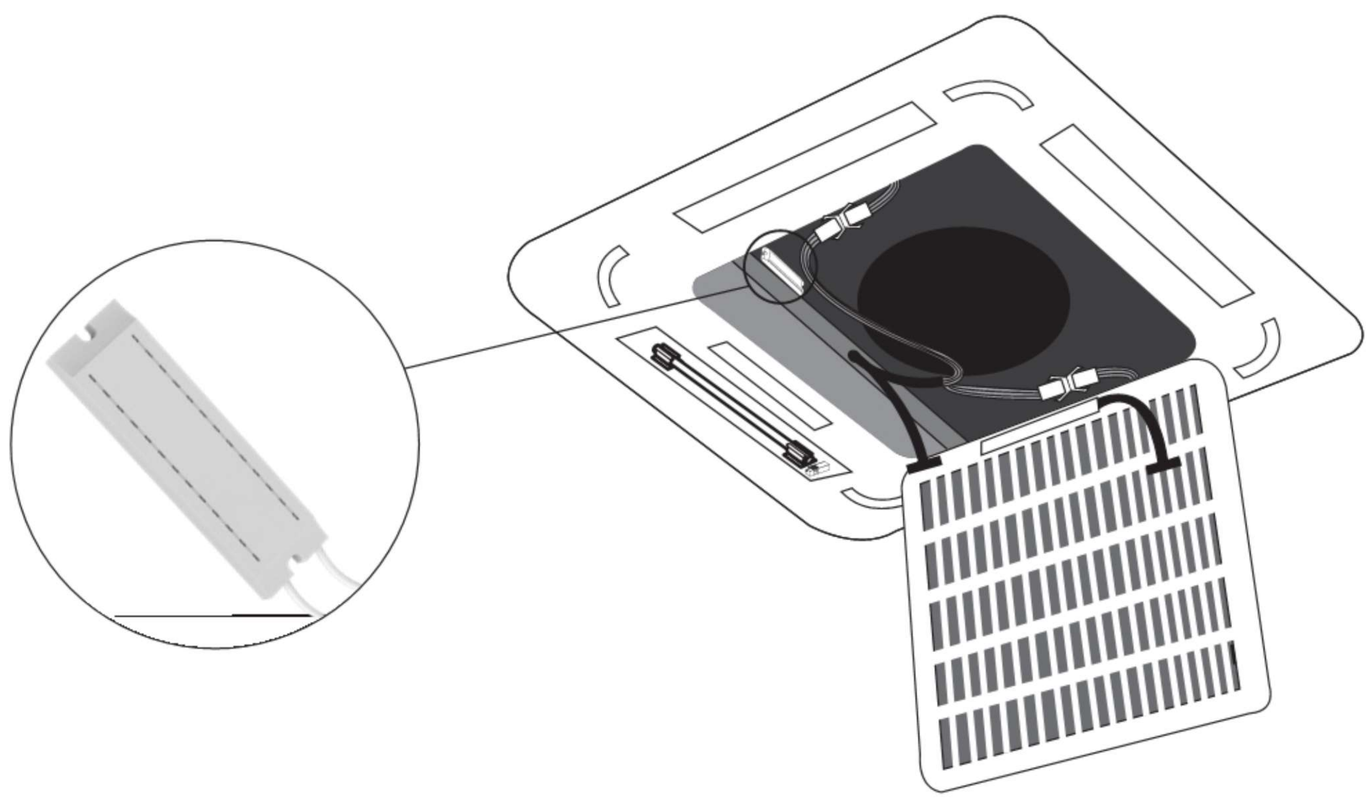

Figure 5.

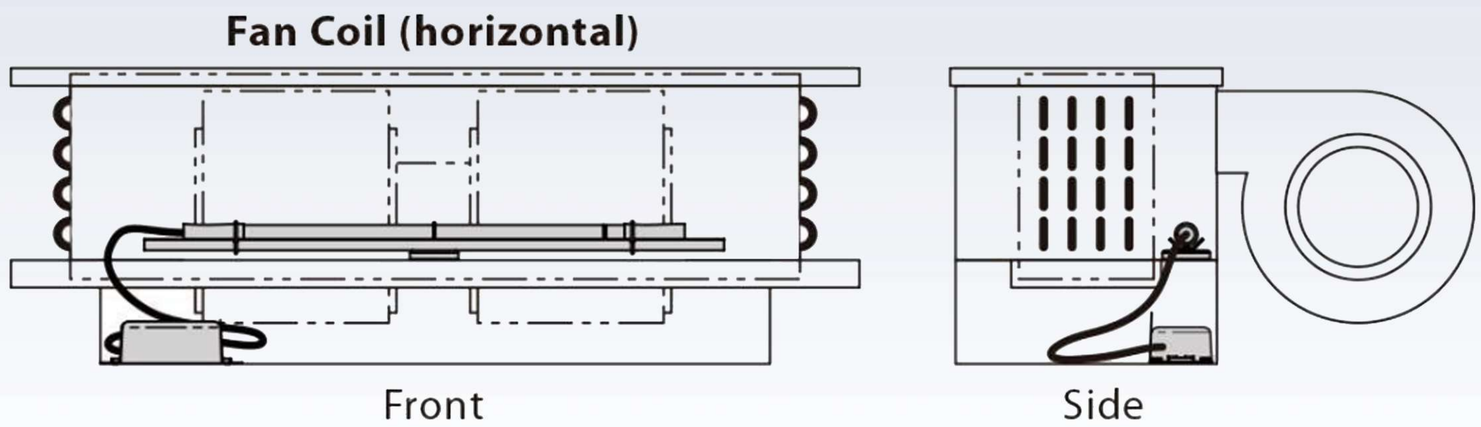

Fig. 6. Example Fan Coil (horizontal) Installation

PLUG IN AND TEST

6

- Connect lamp cords to power supply.(Figure 7.)

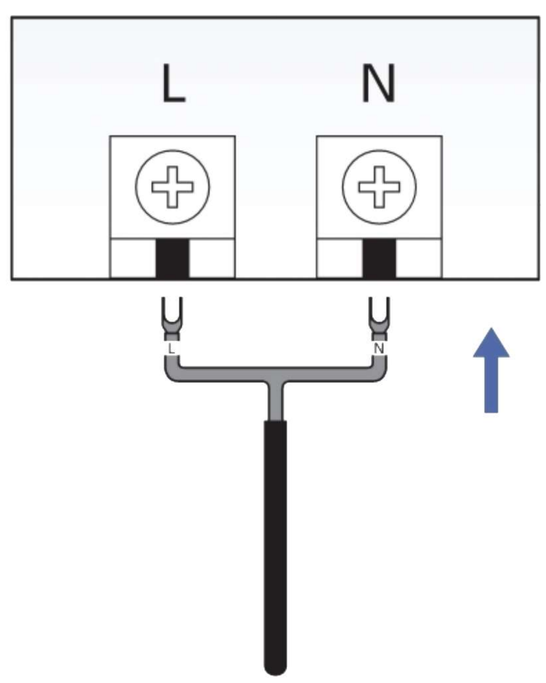

Figure 7.

- Install another set by same steps.
- Plug in and turn on the air conditioner to confirm that the UV device is working.(Figure 8.)

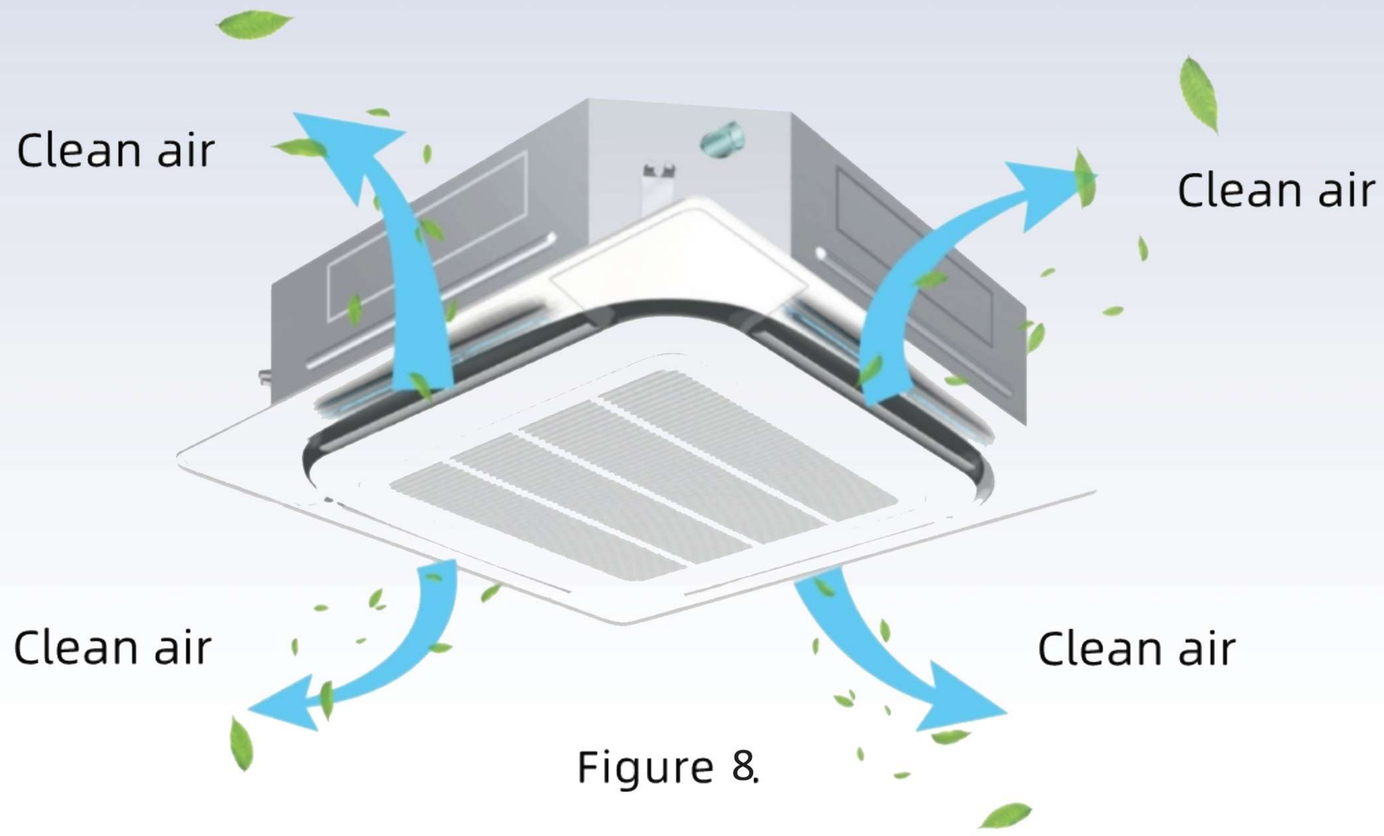

Figure 8.

- Apply the UV warning label in an appropriate location.

NOTE

1.The energy saving airflow sensor turns the unit on only when the cassette working. When the cassette unit off, the UV system will light off automatically.
2.Clean lamp prior to installation: Use a cotton cloth to remove dirt and fingerprints. Failure to clean the lamp could shorten the lamp's lifespan.
3.Follow all instructions on any labels or tags. Carefully inspect all packing materials before discarding to prevent the loss of accessories, mounting hardware, spare parts or instructions.
4.Please keep the operating instructions in a safe place.